Final Report
August 19, 2011

Evaluation of Options for:
Replacement of the South Façade Glazing System
State of Wisconsin
Green Bay, District Office Building

Owner:

State of Wisconsin
Department of Administration
Division of State Facilities
101 E. Wilson Street
7th Floor
Madison, WI 53707

Prepared by:

ARCHITECTS GROUP LIMITED
Architects Group Limited
1825 S. Webster Avenue, Ste 202
Green Bay, WI 54301

Table of Contents

1. Background

2. Existing Conditions

3. DSF Minimum Performance Criteria

4. Alternatives

5. Costs

6. Recommendations

7. Appendix

1. Background

A site visit to the State of Wisconsin district office building in Green Bay located at 200 N. Jefferson Street was conducted on May 3, 2011. This site visit was performed by Dave Johnson and Robert Hoffmann of Architects Group Limited (AGL). The following observations were made.

- The majority of the south façade of the building was designed as a passive solar collector. It consists of an insulated glass curtain wall on the exterior with extruded aluminum louvers for shading of the summer sun. The opposite walls of the stair/elevator core are constructed of concrete and act as a thermal mass heat collector. The plan of the stairwells, elevator core and vertical duct shafts allow for air circulation for the entire height of the building.
- It was noted by the buildings maintenance staff that the passive solar collector does not function as designed. The shading louvers do not apparently block enough of the summer sun and temperatures in the stair cores can easily exceed 80 degrees. In winter, cold air infiltration through the curtain wall system negates any heat increase and or storage process in the stair wells resulting in very little heat being collected in the concrete.
- It was observed that the majority of the insulating glass was very dirty and had not been cleaned in several years. The aluminum louvers are designed with hinges to allow for cleaning. Apparently this was done on a regular basis until one of the louvers was dislodged and destroyed. The replacement cost was very expensive and therefore the cleaning process was discontinued. It is estimated that the visible light entering the space is reduced by 30% to 40%.
- Water infiltration has been observed in both the east and west stairwells located on the south side of the building. Maintenance staff has observed puddles of water on the lowest level of the stairs and evidence of water staining can be seen along some of the aluminum window mullions and concrete walls of the stairwells. The source of the water infiltration is suspected to be at or near the cladding over the elevator penthouse.
- Retaining the existing aluminum louver system is not desired by the Maintenance Staff at this time.

AGL was asked to conduct a study of the aluminum louvers and glazing system in order to develop and evaluate alternates for possible changes to increase the thermal performance an overall comfort of the stairwell system, investigate and make recommendation on any water penetration issues and to develop initial cost estimates for any alternatives and recommendations presented.

2. Existing Conditions

The State of Wisconsin District Office Building is located at 200 North Jefferson Street in Green Bay, Wisconsin. The Designers for the building were prepared by the architectural firm of Ozolins-D'Jock Architects Limited in association with Gunner Birkerts and Associates. The construction plans are dated March of 1982 and the building is estimated to have been completed in 1983. Although several interior renovations of the building have been completed since the building opened, very little to no modifications to the building's shell and exterior have been done to date.

The building consists of a one story, first floor which is basically square with an area of 17,472 square feet. Above the first floor there are 5 additional floors with a parallelogram shape and a typical area of 10,288 square feet. Total square feet of the building is therefore approximately 68,912 square feet. Floor to floor height between the first and second floors is 16'-0". Floor to floor height for the remaining 5 floors is 12'-0". The upper 5 floors are generally organized with a modular open office area on the main portion of the floor with window access on the north, west and east sides with the stair, elevator and mechanical shaft spaces located on the south side.

The buildings most notable feature is the large passive solar collector located on south side of the building. It is designed to take advantage of the stair/elevator and mechanical shafts on the south side of the building. It consists of an insulated glass curtain wall on the exterior with extruded aluminum louvers for shading of the summer sun. The opposite walls of the stair/elevator core are constructed of concrete and act as a thermal mass heat collector. The plan of the stairwells, elevator core and vertical duct shafts allow for air circulation for the entire height of the building.

The intended operation was to collect the heat from the stairwell mass with water convector coils, on all landings throughout the stairwells, by the use of a 20 ton heat pump. The heat was then stored in a 5600 gal. storage tank for use in the closed hot water loop.

The mechanical fans and vent louvers were intended to reverse this operation for winter cooling and utilize the stairwell as a cooling tower, dumping the heat back thru the convector coils and venting with the fans. This chilled water was then stored in 2 - 6000 gal. storage tanks for use.

There are five main areas of curtain wall/louver on the south side. The two areas to the far east and west ends have dimensions of 9'-4" x 51'-4" for a total area of 958 square feet. The two areas immediately inboard of those panels measure 23'-0" x 57'4" for a total area of 2,637 square feet. The center area measures 26'-0" x 60'-0" for an area of 1,560 square feet. Total area of curtain wall, louver is therefore 5,155 square feet.

A review of the building plans from 1982 show that the basic window module is 5'-0" wide by 6'-0" tall. Per detail 1/A4.19, the windows are aluminum framed with 1" insulating glazing. No information is available on the exact type of glazing although no visible tinting was observed. AGL did not have access to either the specifications or window shop drawings therefore it is not possible to determine if the glazing had either low-e coatings or a gas fill other than air. It also appears via the detail that the window framing is not thermally broken.

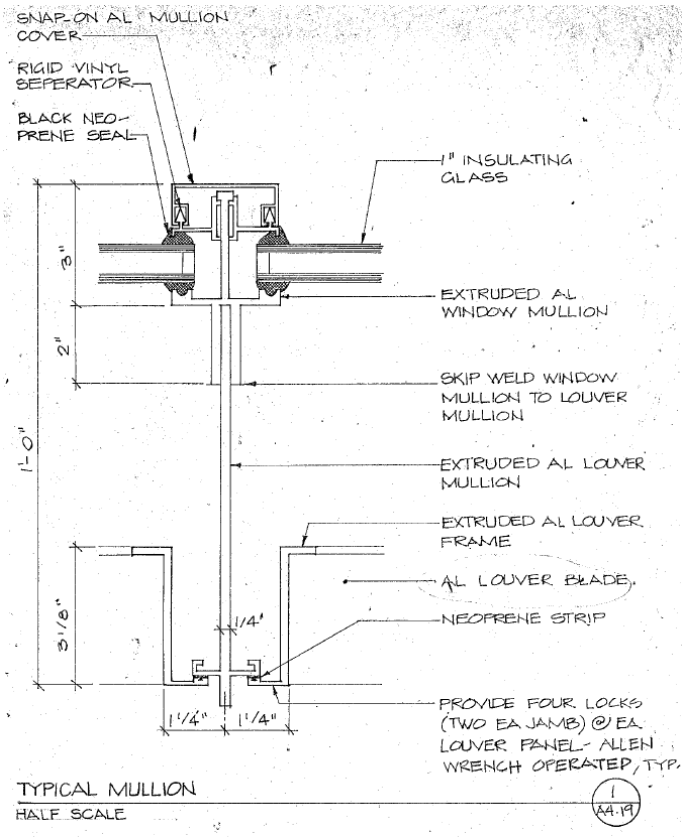

The detail also reveals that the aluminum louver system was welded together with the window mullions which may make removal of the louver frames more difficult if the existing window framing is to remain in place.

The window system itself is supported by connections to a steel column and beam system located just below the various floor levels. Vertical attachment is therefore 12'-0" o.c. while horizontal attachment is at 5'-0" o.c. It is also observed that these connections are for wind load only and the dead load of the window/louver system is carried by direct bearing on the concrete walls below.

Other areas of the south façade without windows and louvers installed are covered with aluminum composite panels with rigid insulation cores. These are approximately 2" thick. Joints are noted to be double silicone sealant joints on the 1982 plans. These panels form the majority of the curved construction above the window walls which encloses the mechanical and elevator penthouses.

Deficiencies as noted by the buildings maintenance staff are as follows:

2.1. The windows are currently extremely dirty. The aluminum louvers are designed with hinges to allow for cleaning and it was noted by the buildings maintenance staff that the windows had been cleaned on a yearly basis during the first part of its life. However, at one point one of the louvers was dropped and destroyed. A replacement was extremely expensive; therefore they have not been opened since. It is estimated that visible light is reduced by the dirt accumulated by up to 40%.

2.2. It was noted by the buildings maintenance staff that the stairwells get very warm to during the day and they are unable to control the temperature. Interior temperatures inside the stair wells routinely exceed 80 degrees and on some occasions they reported tenants not being able to hold onto the metal handrails at the stairs as they had become too hot to grasp. It should be noted, however that the site was visited by AGL personal on 6/14/11. The time of the visit was 11:30 am CDT. The weather was clear and sunny and the ambient temperature outdoors was in the mid 70's. Inside temperatures were comfortable according to AGL personal. It was observed that no direct sunlight was entering the space on a day very near the summer solstice and at time when the sun was nearly overhead. This would suggest that the shading louvers were doing their intended job.

2.3. It was also noted by the buildings maintenance staff that the stairwells get very cold in winter and again, they are unable to control the temperature. Their main suspicion is the lack of thermal resistance (R Value) of the curtain wall system, which allows any heat to escape out of the space.

2.4. The maintenance staff noted that there has been considerable building related movement of the curtain wall system since its initial construction. It was observed that many of the joints between aluminum framing members were open and in some cases mullion covers have popped off. It is reasonable to assume that this movement may be a contributing factor to the cold air infiltration problem identified in Item 2.3 above.

2.5. Several areas of water staining were observed on the concrete walls below the curtain wall sections and evidence of water was observed on some of the horizontal window mullions. It is assumed that this water infiltration is also a result of the system movement which has allowed openings in the glazing gaskets to open up. However, condensation on the window surface may also be a cause of some of the water staining.

2.6. Water staining has also been observed on some of the concrete surrounding walls not associated with the window sections but rather under the aluminum penthouse cladding. Maintenance staff reported that a puddle of water can routinely be found on the ground floor after a hard rain event. It is assumed that this water is entering the aluminum cladding system through the sealant joints.

3. DSF Minimum Performance Criteria

The DSF "MINIMUM REQUIREMENTS AND GUIDELINES FOR FENESTRATION IN THE EXTERIOR BUILDING ENVELOPE" revision 1/22/2008 list the following performance requirements for glazing in new projects:

Item	**Limitations**	**Test Method**
Structural Adequacy	Unit to be tested at 1.5 times design wind pressure, both positive and negative, acting normal to plane of wall; with no glass breakage; no permanent damage to fasteners or hardware parts, or damage to make window inoperable or permanent deformation of any main frame or ventilation section in excess of 0.2 percent of its span, or deflection of any unsupported span (meeting rails, muntins, frames, mullions, or other appurtenances) in excess of L/175.	ASTM E330
Water Penetration Resistance	No uncontrolled water leakage at specified performance level.	ASTM E331
Air Infiltration Resistance Operable Units	Maximum air infiltration of 0.10 cfm/square ft. of window.	ASTM E283
Air Infiltration Resistance Fixed	Maximum air infiltration of 0.06 cfm/square ft. of window.	ASTM E283
Thermal Transmission Resistance	Maximum U" factor: In accordance with IHLR 63.	AAMA 1503.1
Condensation Resistance	Condensation Resistance Factor (CRF) to be minimum 56/frame and 50/glass, with 30 percent inside relative humidity, and 68 degree F temperature.*	AAMA 1503.1
Sound Transmission Resistance	Sound Transmission Class (STC) for typical applications to be minimum of 32	ASTM E413

Of particular importance to the Green Bay District Office building is the thermal transmission resistance or maximum U factor. The U factor is stated as the inverse of R-Value for a given material. The lower the U-Value, the better a material is as resisting thermal transmittance. ILHR 63 references the IBC International Energy Conservation Code (IECC) 2006 edition. Section 502.3 and Table 502.3 gives the maximum U value for glazing in Brown County which is classified as Climate Zone 6, Moist:

Curtain Wall U-Value for Climate Zone 6: (Maximum) 0.45 (R2.22)

Conversely, the Solar Heat Gain Coefficient (SHGC) measures how well a window blocks heat from sunlight. The SHGC is the fraction of the heat from the sun that enters through a window. SHGC is expressed as a number between 0 and 1. The lower a window's SHGC, the less solar heat it transmits.
Table 502.3 of the IECC also gives minimum SHGC values for Brown County:

Solar Heat Gain Coefficient (SHGC) for Climate Zone 6: (Maximum) 0.40

It is estimated that the current U-Value for the existing glazing system is approximately 0.70 which would result in a R-Value of R 1.43.

Conclusion: Windows are performing 65% under current accepted design guidelines.

All four of the alternatives to be presented are predicated on the staff's request to remove the aluminum louver system completely. The hinged louvers are to be removed and recycled. The estimated weight of an average panel is up to 150 lbs of aluminum. The total estimate weight of the panels is therefore could be approximately 27,000 lbs. Salvage prices for aluminum vary day by day. Over the last two months, the price has fluctuated between $0.65 and $0.85 per pound with prices in the high .70's being typical. Therefore, by using a conservative salvage price for extruded aluminum of $0.75 would result in a potential cost savings of $20,250 to the project when this material is recycled. As the support framing is welded to the aluminum entrance framing, this would have to be cut off in the field. If this work is done it would result in an estimated 4,000 lbs of additional aluminum to be recycled for an additional $3,000 of cost savings to the project.

4. Alternatives

Four potential alternatives have been identified as potential ways to increase the thermal performance of the south wall curtain wall system at the Green Bay District State Office Building. They are as follows:

1. Addition of a tinted window film to the existing glazing
2. Replacement of the existing glazing within the exiting window framing
3. Replacement of the existing glazing and framing system, with a higher performance curtain wall system
4. Replacement of the existing glazing and framing system with a non-glass system.

Option 1: Addition of a Window Film to the existing curtain wall

This option involves the addition of an aftermarket window tint to the existing glazing such as one of the 3M Prestige Series films. Four tints are available which nominally block up to 97% percent of the suns infrared light. Specific product info is included in Appendix A of this report.

Based on the site conditions and the relative lack of access to the larger portion of the curtain wall behind the elevator core, an exterior application of any tinting film is required.

3M Sun Control films carry a 15 year warranty when installed by a 3M professional accredited installer. The warranty also includes 5 year warranty on glass breakage due to thermal shock as a result of the installation of a sun control film.

The following information was obtained from the 3M website for their Prestige Series Films. Values listed are in comparison to a dual glazed, clear insulated window.

Film	SHGC	Visible Light Transmission	Visible Reflection Exterior	Visible Reflection Interior	U Value	Glare Reduction	Heat Loss Reduction	Heat Gain Reduction
Dual 1/4 Clear	0.70	79%	15%	15%	0.47	NA	NA	NA
PR40	0.51	35%	14%	8%	0.47	55%	2%	27%
PR50	0.53	45%	15%	9%	0.47	44%	2%	25%
PR60	0.54	54%	15%	11%	0.47	32%	2%	22%
PR70	0.56	62%	15%	13%	0.47	22%	2%	21%

As indicated above, the film with the highest overall Heat Gain Reduction is the PR40 film which allows only 35% of visible light through the film. This film has the lowest SHGC at 0.51. It is also noted that none of the films will be able to achieve a SHGC within the guidelines set forth by the DSF Fenestration Guidelines and none are able to decrease the U value of the exiting glazing system.

Advantages

- Installation of a window film has the lowest initial installed cost of all the alternatives.
- Reduction of solar heat gain is 27% better than the existing glass in comparison to new glazing at 47% better than existing.
- Little to no change in exterior appearance to the existing curtain wall system.

Disadvantages

- Installation of a window film will not achieve a SHGC which is within the DSF Fenestration Guidelines.
- There would be little or no change in the overall U-value of the system which therefore would not change winter (heat loss) performance of the curtain wall system.
- Useful life span of the exterior applied film would be 5 to 10 years.
- Does not address water infiltration and/or condensation issues with the curtain wall system.

Option 2: Replacement of Glazing in Existing Window Framing

This option would be to replace the existing glazing with higher performance glass, while re-using the existing window framing. The new glass would be 1" insulating glass with a Low-E coating on the #3 surface with argon gas filling of the air space. The suggested glass would be similar to a Viracon VE 1-2M. Both panes of glass would be clear. Specific product info on the Virocon glass is included in Appendix A of this report.

The existing curtain wall system of the building is designed to be interior glazed. Installation would consist of removing the aluminum snap cap covers, and removing the interior portion of the screw spline framing. The new glazing would be installed and the screw splines and snap caps re-installed. It is noted that one local glazing firm who was consulted on this arrangement would not recommend replacing the glazing in this way and would not bid on the project if issued as glazing replacement only.

Warranties on this type of glass are typically 10 years for both the integrity of the Low-E coating and for loss of the insulating glass seal from the date of substantial completion.

The Viracon VE 1-2M glass has the following characteristics:

Visible Light Transmittance	70%
Solar Energy Transmittance	33%
Ultra-Violet Transmittance	10%
U-Value, Winter	**0.25/btu(hr x sqft x °F)**
U-Value, Summer	0.21/btu(hr x sqft x °F)
SHGC	**0.37 btu(hr x sqft)**

Therefore, this type of glass meets the DSF Fenestration Guidelines for U-Value and SHGC.

This option also includes the opportunity to replace some of the vision glazing with either spandrel glass or insulated panels to further increase the thermal performance of the window system. One possible alternative for this is shown on Drawing 1. Due to the fact that the large central area of glazing is accessible only to the back of the elevator core, it can be changed entirely to spandrel glass or metal panels without affecting the interior function of the spaces. The remaining areas of glazing could be changed to locate vision glass in the areas of the stairwells. This reduces the vision glass from a total of 4,832 SF to 2,266 SF, a reduction of 53%.

One alternative would be to use a 1" insulated panel such as a Mapes-R Panel which consists of a porcelain coated aluminum face sheet, hardboard substrate and polystyrene insulated core. Stated R value for the Mapes panel is 4.74.

Based on the difference between the U Value of the Viracon vision glass at 0.25 and the U-Value of the insulated panel at .21, for the areas indicated above, this type of change could result in a 9.8% increase in performance.

Stated up-charge costs for the insulated panels are $15/SF. This would result in a cost increase of approximately $38,500 to change from glass to insulated panels for this alternative.

Advantages

- Replacement of the existing glazing has the second lowest initial cost of all the alternatives.
- New glazing would meet the DSF Fenestration Guideline recommendations for both U-Value and SHGC.
- Little to no change in exterior appearance to the existing curtain wall system.

Disadvantages

- Based on the fact that the existing aluminum louver system is welded to the existing window framing system, if it is to be removed, the remaining framing system may be damaged or become visually flawed.
- Does not address water and or air infiltration with the window framing system.
- Not recommended by at least one local glass and glazing installer based on the deteriorated condition of the existing framing.

AREA 1
CLEAR 438s.f.

AREA 2
CLEAR 695s.f.
SPANDREL 523s.f.

AREA 3
SPANDREL 1,520s.f.

AREA 4
CLEAR 695s.f.
SPANDREL 523s.f.

AREA 5
CLEAR 438s.f.

TOTALS
CLEAR 2,266s.f.
SPANDREL 2,566s.f.
4,832s.f.

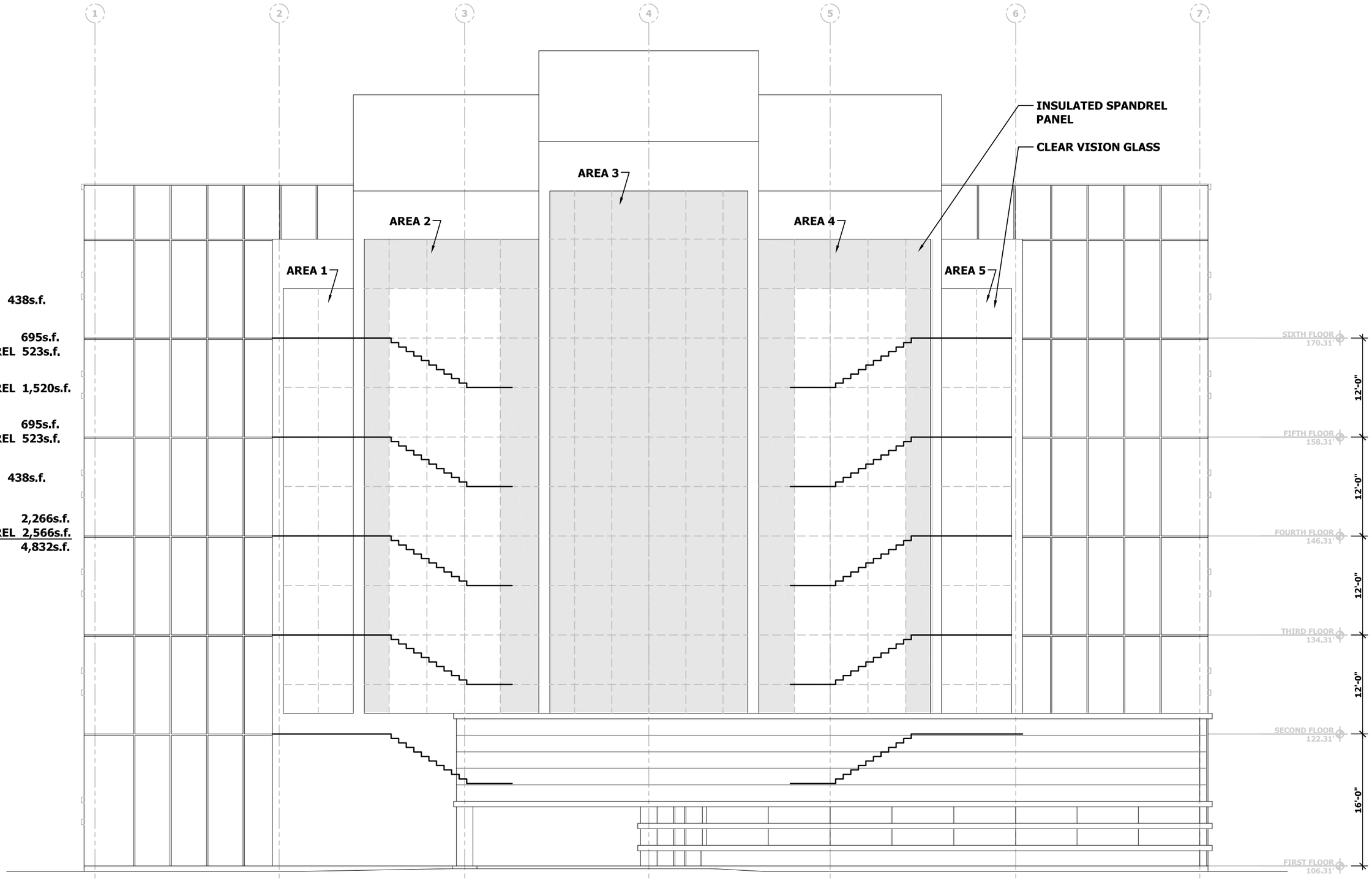

SOUTH FACADE-OPTION #2 & #3

DRAWING 1

Option 3: Replacement of Glazing and Existing Window Framing

This option would replace both the existing glazing and window framing system completely. The glass selected would also be the Viracon VE 1-2M as specified above. The framing system recommended would be a thermally broken curtain wall system similar to the Superwall system from Wausau Windows. This system features a 2 ½" frame width which is equal to the existing system and a 6 1/4" frame depth. The additional depth can be accommodated based on the fact that the aluminum louver system will be removed. It features a 10 mm EPDM thermal break and can accommodate glass sizes from ¼" to 1 ¼".

Air infiltration is rated at a maximum 0.06 cfm per square foot of fixed area at 6.24 psf pressure differential when tested in accord with ASTM E283. The system would also not allow any uncontrolled water leakage at 15.00 psf static pressure differential, with water application rate of 5 gallons/hr/sq ft when tested in accord with ASTM E331.

The SuperWall system is of screwed spline, pressure plate construction designed to be field glazed. Glazing is done from the exterior of the building.

Warranties for this type of framing are typically up to 10 years from substantial completion for materials and finishes and up to 5 years for installation.

When tested with the Viracon VE 1-2M glazing the SuperWall had the following thermal characteristics:

U-Value	0.36/btu(hr x sqft x °F)
SHGC	0.34 to 0.65 btu(hr x sqft)
Condensation Resistance (CRF)	71 (Frame)
	75 (Glass)

Therefore, the above combination exceeds the minimum requirements of the DSF Fenestration Guidelines.

As with Option #2, the opportunity also exists to replace some of the vision glass with insulating panels.

Advantages

- Removal of the louver system would be easier along with the existing framing. Additional costs for recycling the aluminum framing could be recovered.
- New framing and glazing would meet the DSF Fenestration Guideline recommendations for both U-Value and SHGC.
- Would address the water and air leakage issues with the existing curtain wall system.
- Little to no change in exterior appearance to the existing curtain wall system.

Disadvantages

- Replacement of the existing framing has the highest initial cost based on all of the alternatives.
- Spaces adjoining the glazing are not occupied and therefore would not benefit from the vision glass.

Option 4: Replacement of Glazing with Alternative Material

This option replaces the existing glazing and window framing completely with an alternative material such as Kalwall. The recommended system would be Kalwall, 2 ¾" wide panels. These panels consist of a structural composite sandwich panel consisting of a translucent fiberglass reinforced face sheets and thermally broken aluminum I beam framing. The interior space can be filled with translucent fiberglass batt insulation in order to increase the thermal resistance (R Value) of the panels. Standard face sheet colors are white or crystal. Kalwall panels can be unitized in any configuration up to 5'-0" wide by 35'-0" tall. This fact should help with installation time in the field. Specific product info for the Kalwall panels is included in Appendix A of this report.

Typical manufacturer's warranty is 1 year standard on the exterior face sheet. Optional warranty periods are available up to 25 years for an additional cost. Standard installation warranty is variable to conform to any requirements specified in the bidding documents.

The selected 2 ¾" thick panel with the optional fiberglass insulation has the following thermal characteristics:

U-Value: Panel	0.10/btu(hr x sqft x °F)
U-Value: System	0.16/btu(hr x sqft x °F)
SHGC	0.13 btu(hr x sqft)

The system U Value translates into an R Value of 6.25, approximately 281% over the state mandated minimum performance standard and a 337% increase over the existing system. The selected panel also has a visible light transmittance of 8%. The SHGC also exceeds the DSF minimum performance value.

The proposed solution would convert the entire 5,155 square foot area of glazing to Kalwall panels. Using this configuration, the R-Value of the system would increase from an existing R Value of 1.43 to the above referenced R-Value of 6.25, an increase of R4.82.

A preliminary elevation of the south façade using Kalwall panels is shown on Drawing 2.

Advantages

- Highest potential R-Value and SHGC capability of any of the Options.
- Removal of the louver system would be easier along with the existing framing. Additional costs for recycling the aluminum framing could be recovered.
- Would address the water and air leakage issues with the existing curtain wall system.
- Premium for vision glass would not be wasted on unoccupied spaces in the stairwells.

Disadvantages

- This option would have the most significant change to the buildings appearance.
- There would be no vision areas from the stairwells for people using the stairs.

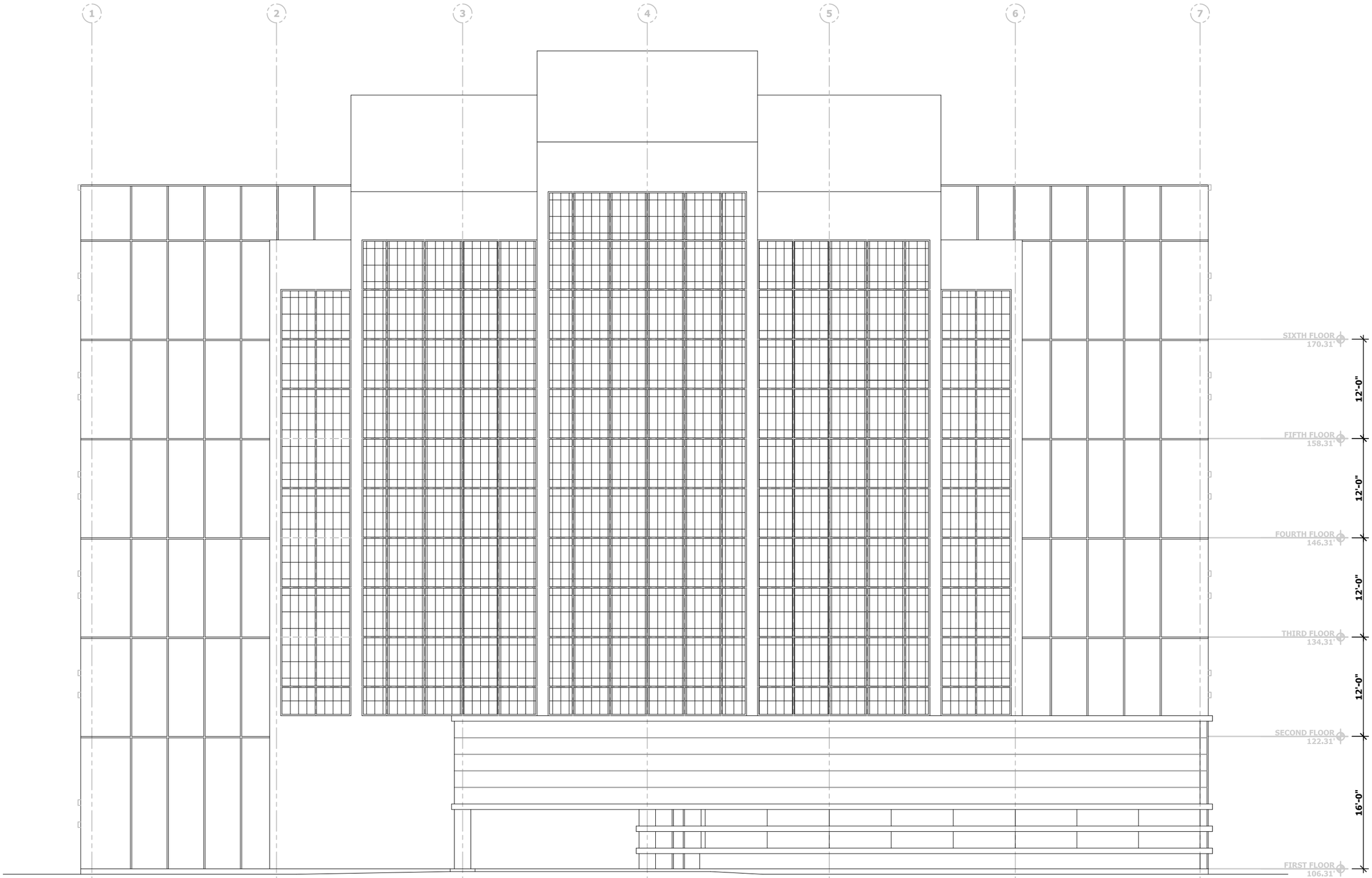

SOUTH FACADE-OPTION #4

DRAWING 2

Option 5: Cladding

The upper portions of the south façade are enclosed with a composite aluminum panel consisting of a ¼" outer panel, 2" of insulation and an aluminum liner panel. These panels are connected to a combination of steel stud and structural steel angle framing. The average panel size is 5'-0" wide by 12'-0" tall although smaller panels are located at the top and curved portions of the building.

Joints between the panels are double silicone sealed caulk joints per the attached detail 10/A4.17. This type of joint is used vertically and horizontally between panels and also on the curved portion at the very top of the building. According to the building staff, these caulk joints have been re-done in 1994 (DSF Project #93570). A urethane sealant was used at that time.

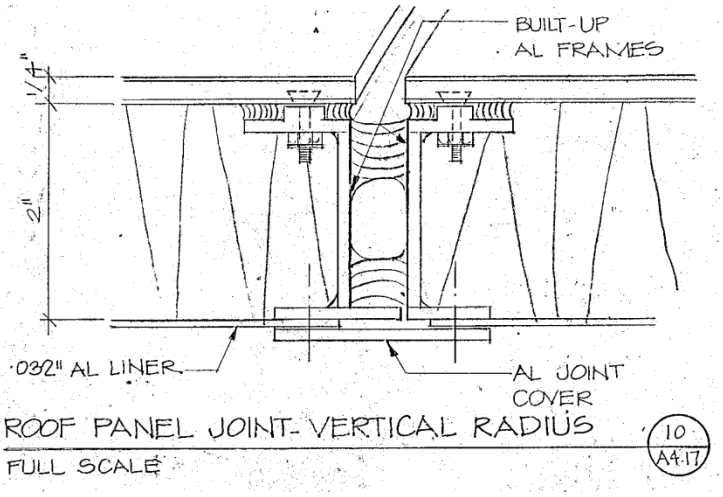

As described in item 2.6 above, water staining has also been observed on some of the concrete surrounding walls not associated with the window sections but rather under the aluminum penthouse cladding. Based on the above detail, it is assumed that water is entering the system through these caulk joints. Nominal joint width is listed at ½". Typical expansion contraction capability for a basic silicone sealant is 50% therefore these joints should be able to withstand thermal or building movement from ¼" to ¾". It is noted that the cladding is subjected to larger than average thermal and wind load stresses based on its location on the south, sun facing façade and top of the building.

The average useful lifespan of silicone sealants is from 10 to 20 years. Specific warranty information is not available from most manufacturers, as joint quality is based more on installation and not the material used. Knowing that the joints were re-caulked in 1994, the current sealants are approaching the end of it useful life at 17 years old.

It was also observed that many of the exterior panels are discolored and/or oxidized which contributes to the overall run-down appearance of the building. This may be the result of the urethane sealants used at the 1994 re-caulking.

Further detailed testing of a small area is recommended. It is likely that the existing sealant was not removed at the time of the previous re-caulking job. A test should be done to verify if this was done or not. Also a test portion should be resealed to verify that any residual material can be cleaned out of the joint safely without compromising the secondary sealant joints at the panels themselves and also to ensure proper adhesion and movement capacity of any new sealant.

The recommended solution would be a two step process. The first step would be to clean the panels using a bio-degradable, degreasing type cleaner. This would be applied using a hand sprayer. Then the panels would be washed with hot water using a pressure washer.

After cleaning is complete, the existing sealants would be removed and replaced with silicone sealant such as GE Silpruf S2000.

Prices for this type of work are affected by the ability to access the work site. It is estimated that there is up to 4,000 LF of caulk joints in the aluminum cladding. Installed costs are estimated at $16.00 LF for a total project cost of up to $64,000. Cleaning the panels would add another $20,000 to the project.

5. Costs

Proposed construction costs have been prepared for all of the alternatives described in Section 4. Where possible, actual costs have been prepared by the representatives of the various systems. Remaining items have been prepared using R.S. Means Square Foot Construction Cost Data, 2010 Edition and/or historical data compiled by Architects Group Limited on previous projects.

The following costs are estimated in 2011 dollars. An inflation factor of between 5% and 8% per year should be applied to these costs if the work is projected to be completed in the future.

It is also noted that the current state of the economy has depressed construction prices in the Green Bay and Fox Valley area. That fact, combined with the current interest rates make it a very good time for construction projects. Industry analysis, however, indicate a price jump of up to 10% in construction material costs after signs that the economy has started to recover. This trend is already evident in commodity pricing for materials such as aluminum. Construction cost inflation is also forecast base on an overall lower capacity for production of construction materials and from contractors applying more reasonable levels of markup and profits to project bids.

Alternative #1: Add Window Film	
Remove existing aluminum louvers	$68,500
Recycle aluminum louvers	($20,250)
Add 3M PR-40 window film to exterior	$85,000
General Conditions, Contractor O&P	$23,025
Contingency	$7,675
Total	**$163,950**
Average cost/sf of glazing area	$31.80
Alternative #2: Replace Glazing Only	
Remove existing aluminum louvers	$68,500
Recycle aluminum louvers	($20,250)
Remove and replace glazing with Viracon VE 1-2	$263,000
General Conditions, Contractor O&P	$49,725
Contingency	$16,575
Total	**$377,550**
Average cost/sf of glazing area	$73.24
Upcharge to replace vision glazing with insulated panels	$38,500
Alternative #3: Replace Glazing and Framing System	
Remove existing aluminum louvers	$68,500
Recycle aluminum louvers	($20,250)
Recycle aluminum framing	($3,000)
Remove and replace glazing and framing system	$328,000
General Conditions, Contractor O&P	$59,475
Contingency	$19,825
Total	**$452,550**
Average cost/sf of glazing area	$87.79
Upcharge to replace vision glazing with insulated panels	$38,500
Alternative #4: Replace Glazing with Kalwall	
Remove existing aluminum louvers	$68,500
Recycle aluminum louvers	($20,250)
Recycle aluminum framing	($3,000)
Remove existing glazing and framing system, install Kalwall	$255,000
General Conditions, Contractor O&P	$48,525
Contingency	$16,175
Total	**$364,950**
Average cost/sf of glazing area	$70.80
Remove and replace caulking at aluminum cladding	$64,000
Add for cleaning of aluminum cladding	$20,000

6. Recommendations

Based on a review of the four options, it is thereby recommended to remove the existing window system in its entirety and replace it with the Kalwall system as identified in Option 4. The following reasons are listed to back up this recommendation:

- The applied film option does not address heat loss during the winter months.
- The glazing only option is not recommended based on the poor condition of the existing framing.
- Of the four Options evaluated, the Kalwall option has the second lowest initial installation cost.
- The Kalwall system has the lowest U-Value (Highest R-Value) and the lowest SHGC of the four options evaluated and therefore has the best performance for both heating and cooling conditions. This fact combined with the lower installation costs listed above would result in the shortest payback period for the State.
- Use of this option would not result in a premium paid for vision glazing in non occupied spaces.
- Replacement of entire glazing system will allow for re-sealing of the head and sill joints and therefore address the water infiltration issues.

It is also recommended that the existing aluminum cladding be cleaned and resealed as listed in Section 5 of this report.

7. Appendix

The following reference materials are attached as backup material on the alternatives discussed.

A. Product Info: 3M Prestige 40 Window Film

B. Product Info: Viracon VE1-2M Insulated Glazing

C. Product Info: Wausau Superwall Curtain Wall Framing

D. Product Info: Kalwall 2 ¾" Panels

Technical Bulletin

3M™ Sun Control Window Film — Prestige 40 Exterior

With Prestige Exterior Series Window Films, you can enjoy the benefits of a world-class window film while leaving the beauty of your windows virtually unchanged (Prestige 40 Exterior will add a slight, non-reflective tint to the window). Because Prestige Exterior Series Window Films use no metals, they are not susceptible to corrosion in coastal environments and do not interfere with mobile phone reception.

Other window films that reject heat tend to have high reflectivity, but not Prestige Series Window Films. They offer reflectivity that is actually lower than glass. A final key technical feature of the Prestige line of products is that they were designed to perform best when the sun is high, at the hottest parts of the day, so when the sun is working hardest our films are reflecting the most heat!

Prestige 40 Exterior is a multi-layer and metal-free film based on nanotechnology. It has a uniquely high visual light transmission for a film that has exceptionally high heat reduction capabilities. The film also significantly reduces the amount of UV rays which are the main cause of fading. The patented multi-layer construction and manufacturing process guarantees a high quality and an even longer warranty and life expectancy compared to other exterior film solutions.

Edge sealing of Prestige 40 Exterior is not required on vertical applications, except where moisture can accumulate for an extended time. Edge sealing on horizontal/sloped applications is recommended. A recommended edge sealant is 3M™ Impact Protection Adhesive.

Glass Type	Film Type	SHGC	VLR ex.	VLT	Luminous Efficacy*	TSER	Heat Gain Reduction
Single Pane							
Clear	No Film	0.82	8%	89%	1.1	19%	–
	Prestige 40 Exterior	0.39	6%	42%	1.1	61%	53%
Tinted	No Film	0.63	5%	53%	0.8	37%	–
	Prestige 40 Exterior	0.33	5%	25%	0.8	67%	47%
Double Pane							
Clear	No Film	0.70	14%	79%	1.1	30%	–
	Prestige 40 Exterior	0.29	7%	37%	1.3	71%	59%
Tinted	No Film	0.51	8%	45%	0.9	49%	–
	Prestige 40 Exterior	0.23	6%	22%	1.2	77%	55%

* Luminous Efficacy ratio is the ratio of visible transmittance (VLT) to solar heat gain expressed as a dimensionless fraction. If LSG is greater than 1.0, then the glazing system transmits more light than heat.

** Performance data generated for a typical film on 1/4" glass using applicable industry test methods and standards. Infrared rejection measured from 900nm–1000nm.

- Fast drying and easy to install
- Clear transparent appearance results in minimal aesthetic change to the look of the building
- Excellent solution to reduce solar heat gain, to keep you cooler
- Reduces air conditioning costs
- Helps preserve the appearance of furniture and fabrics

Features (on 1/4" clear glass)

Total Solar Energy reduction 61%
TSER (measured in 60° angle) 70%
IR Reduction** 97%
Glare Reduction 52%
UV Blocked** 99.9%

Structure of the Film

Thickness ..... 2 mils
Color ..... Lightly Tinted
Material ..... Multilayer Optical Film
Adhesive ..... Special Acrylic
Top Coating ..... Scratch-resistant hard coat

Installation

Prestige Exterior Series Window Films are installed using water and a soap solution. They are faster drying than conventional exterior window films resulting in full adhesion in approximately twenty (20) days at 70°F (in dry conditions).

Cleaning

After thirty (30) days, you may clean 3M™ Sun Control Window Films using normal household cleaning solutions, including ammonia based products, and a soft, lint-free cloth or towel. You may also use a squeegee to clean the films. Abrasive products will scratch or damage the film and should never be used.

For more information, please call **1-800-480-1704** or visit us at **www.3M.com/windowfilm**

Technical Information: The technical information, recommendations and other statements contained in this document are based upon tests or experience that 3M believes are reliable, but the accuracy or completeness of such information is not guaranteed.

Product Use: Many factors beyond 3M's control and uniquely within user's knowledge and control can affect the use and performance of a 3M product in a particular application Given the variety of factors that can affect the use and performance of a 3M product, user is solely responsible for evaluating the 3M product and determining whether it is fit for a particular purpose and suitable for user's method of application.

Warranty, Limited Remedy, and Disclaimer: Unless an additional warranty is specifically stated on the applicable 3M product packaging or product literature, 3M warrants that each 3M product meets the applicable 3M product specification at the time 3M ships the product. 3M MAKES NO OTHER WARRANTIES OR CONDITIONS, EXPRESS OR IMPLIED, INCLUDING, BUT NOT LIMITED TO, ANY IMPLIED WARRANTY OR CONDITION OF MERCHANTABILITY OR FITNESS FOR A PARTICULAR PURPOSE OR ANY IMPLIED WARRANTY OR CONDITION ARISING OUT OF A COURSE OF DEALING, CUSTOM OR USAGE OF TRADE. If the 3M product does not conform to this warranty, then the sole and exclusive remedy is, at 3M's option, replacement of the 3M product or refund of the purchase price.

Limitation of Liability: Except where prohibited by law, 3M will not be liable for any loss or damage arising from the 3M product, whether direct, indirect, special, incidental or consequential, regardless of the legal theory asserted, including warranty, contract, negligence or strict liability.

3M Renewable Energy Division
3M Center, Building 235-2S-27
St. Paul, MN 55144-1000
www.3M.com/windowfilm

© 3M 2011. All rights reserved.

90-0150-0201-1

3M is a trademark of 3M.

Low-E (VE) Insulating Glass With Argon Gas

VE 1-2M

Make-Up

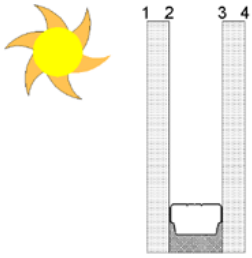

Notes:
1/4" (6mm) clear VE-2M #2
1/2" (13.2mm) argon space
1/4" (6mm) clear

Performance Data

Metric | English

Product Code	VE 1-2M
Transmittance	
Visible Light	70%
Solar Energy	33%
Ultra-Violet*	10%
Reflectance	
Visible Light-Exterior	11%
Visible Light-Interior	12%
Solar Energy	31%
NFRC U-Value	
Winter	0.25 Btu/(hr x sqft x °F)
Summer	0.21 Btu/(hr x sqft x °F)
European U-Value	1.2
Shading Coefficient	0.43
Relative Heat Gain	89 Btu/(hr x sqft)
Solar Factor (SHGC)	0.37
LSG	1.9

*Ultra-violet defined as 300 to 380 nanometers (nm)

Viracon, Inc. 800 Park Drive -
Owatonna, MN 55060
(800) 533-2080
(507) 451-9555

©2009 Viracon, Inc.

WAUSAU
WINDOW AND WALL SYSTEMS

TECHNICAL GUIDE

Curtainwall and Window Wall

SUPERWALL Series CURTAINWALL

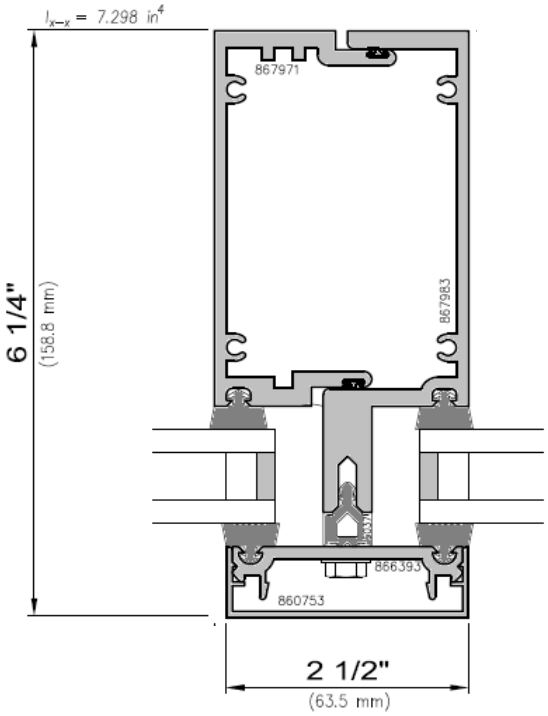

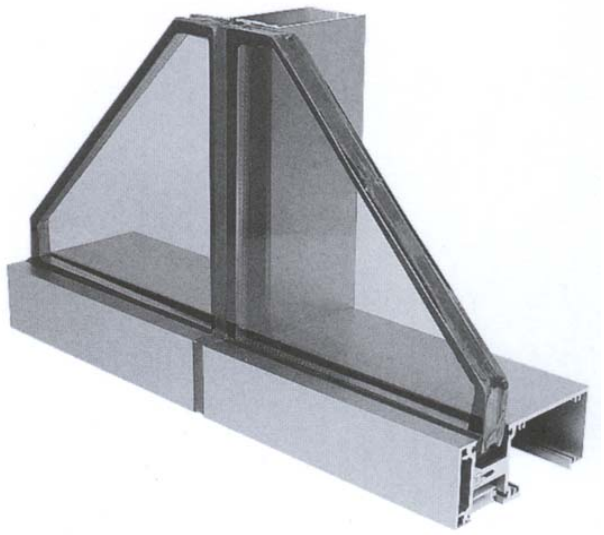

Features

- ✓ Wausau's flagship curtainwall product line
- ✓ Several frame depths including cladding for steel tubes
- ✓ 2 ½" or 3" exterior sight line
- ✓ Many accent covers available
- ✓ 3/8" thermal separation
- ✓ Proven pressure-plate system designed for field glazing
- ✓ Captured or vertical structural glazed
- ✓ Splayed mullions available for segmented radii
- ✓ Screw-spline construction
- ✓ Zero sight line vents available
- ✓ Available with interior access doors and between-glass blinds
- ✓ Exterior sun shades and interior light shelves available
- ✓ Recycled aluminum framing available upon request

Performance

Allowable Air	0.06 cfm/sqft at 6.24 psf
Water	15 psf
NFRC U-Factor	0.36 to 0.76 BTU/hr.sqft.°F (est)
CRF_f	67 to 78
STC	31 to 37

DISCLAIMER: Wausau Window and Wall Systems takes no responsibility for product selection or application, including, but not limited to, compliance with building codes, safety codes, laws, merchantability or fitness for a particular purpose; and further disclaims all liability for the use, in whole or in part, of this Technical Guide in preparation of project specifications and/or other documents. Technical Guides are subject to change at any time, without notice, and at Wausau's sole discretion. ©2009 Wausau

7800 International Drive . P.O. Box 1746 . Wausau, WI 54402-1746 . Phone 715.846.2161 . Fax 715.846.4350 . www.wausauwindow.com

Since 1955

Kalwall®

Translucent Wall and Skyroof™ Systems

Since 1955

Kalwall®

...light-years Ahead!™

Shin'enKan Pavilion for Japanese Art, Los Angeles, CA
Bruce Goff, Designer; Bart Prince, Architect

Blackfoot Crossing Historical Park, Alberta, Canada
Goodfellow Architecture Ltd.

Mona Shores High School, Mona Shores, MI
URS Greiner, Architects

Kalwall®, developed and manufactured in the U.S.A. for over fifty years, is a highly insulating, diffuse-light-transmitting composite. A matrix of glass prisms inherent in Kalwall absorbs external light levels and redistributes an interior Museum-quality Daylighting™ that virtually eliminates glare, hot spots and shadows. Introducing natural daylight into any space is beneficial to health, productivity and general well-being.

Kalwall's unique construction reduces solar gain while at the same time maximizing thermal insulation with resultant cost and environmental benefits.

Kalwall is rated a green and sustainable building component because of the way it is manufactured and its material composition. It reduces both the environmental impact of the building process and the building's energy consumption. Importantly, it makes a substantial contribution to providing a safer and healthier indoor climate.

No *other fenestration or system matches the performance of Kalwall.*

Powerful Advantages

- ***Maximum Environmental Benefits***
- ***Proven Structural Integrity***
- ***Demanding Code Compliance***
- ***Design and Aesthetic Flexibility***
- ***System Reliability and Integrity… for over 50 years!***

Farm Bureau Credit Union, Goshen, IN; Leedy/Cripe Architects
DesignBuilder, DJ Construction Co., Inc.; Photo by Michael Dailey, Dailey Photo

Sustainable… LEED® Contributor

Cover photo: *Walla Walla Community College, William A. Grant Water & Environmental Center, Walla Walla, WA; ALSC Architects; Photo ©Explosive Illusions.com* ***Lower left:*** *Academy of Information Technology and Engineering at Rippowam Campus, Stamford, CT; Fuller and D'Angelo, P.C. Architects and Planners* ***Lower right:*** *Blackburn College, Lancashire, UK; DLA Architecture*

The most highly insulating daylighting system in the world!

What Kalwall is...

The primary element of the Kalwall System is a flat or curved, structural composite sandwich panel formed by permanently bonding specially formulated, fiberglass-reinforced translucent faces to a grid core constructed of interlocked, structural aluminum/composite, thermally broken I-beams.

The natural thermal properties of the sandwich panel can deliver increased energy performance by the inclusion of translucent fiberglass "batts" or aerogel during the manufacturing process and by specifying a fully thermally broken grid core. U-value options range from .29 to .05 (1.57 to .28 W/m²K) by NFRC for the 2¾" (70 mm) thick panels and .15 or .08 (.83/.45 W/m²K) for 4" (100 mm) thick panels.

Kalwall panels are installed with the efficient, proven Clamp-tite™ aluminum system.

Far Hills Country Day School, Far Hills, NJ
Butler Rogers Baskett Architects; Peter Brown, Woodruff Brown Photography

Milwaukee Zoo Primate House, Milwaukee, WI
Jones & Jones Architects

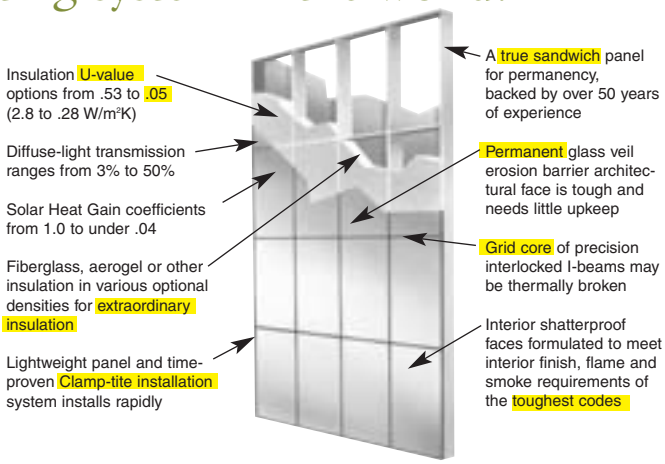

• Superior Load Capacity

When the wind starts to howl or rain and snow start to accumulate... or if someone walks across a skylight or skyroof, enormous loads push delicate poly-plastic panels far beyond their limit. Warping, buckling and collapsing result, followed by extensive interior damage and even bodily harm. Kalwall's composite panel delivers miraculous performance which can stand up to hurricane-force winds and other loads with ease.

This is NOT possible with competitive systems!

• Weathering/Color Change:

Kalwall's exterior face is made with innovative super-weathering and colorfast resins the full thickness... not a low-grade substrate overlaid with thin plastic film or gel to simulate weatherability. All standard exterior faces include a permanent glass veil erosion barrier to prevent "fiber bloom"!

• Kalwall Structural Thermal Break Composite

- 2⅝" (68 mm) I-beam • 1¾" (44 mm) Non-conductive break
- 4" (100 mm) I-beam • 3" (76 mm) Non-conductive break
- Stronger than aluminum • Passes fire testing to 1200°F
- Superior insulation in panels — U-values as low as .05 (.30 W/m²K)
- Stops condensation — CRF 80+

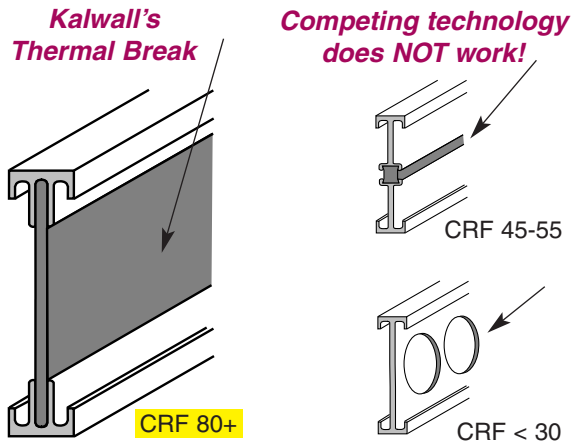

8 Daylighting Systems... Endless Possibilities

SUNY Athletic & Wellness Center, New Paltz, NY; RMJM Hillier, Architect

Washington County Library, R.H. Stafford Branch, Woodbury, MN; ESG Architects, Inc.
Don Wong Photo, Inc.

Washoe Medical Center, Reno, NV; HRD, Architect

• Walls • Curtainwall • Window Replacement

BMW Wolverhampton, West Midlands, UK
MDG Architects; Photo by Daniel Hopkins

Wall Systems

- Rapidly and economically enclose space – totally pre-finished when in place.
- Epitomizes the original Kalwall translucent sandwich panel concept.
- Controlled, natural daylight combined with many thermal and solar options.
- May be either flat or curved sandwich panels.
- Structural sandwich panels up to 5' x 20' (1500 mm x 6000 mm), 2¾" (70 mm) or 4" (100 mm) thick are secured to building with simple, Clamp-tite™ aluminum extrusions. System seals panel/panel and building, allowing for expansion/contraction and proper weepage to channel any moisture to building exterior.

X2 Warehouse, Heathrow Airport, UK; Cornish Architects
Photo by Chris Mikami

Northumbria University, Newcastle, UK
Atkins Design Studio, Architect

Curtainwall Systems

- Factory-assembled 2¾" (70 mm) sandwich panels, operating/fixed windows, louvers, even opaque panels.
- Provide rapid installation and permanent weather seal, unlike most stick-built, "frame and glaze" components which are all field-assembled.
- Kalwall prefabricated Curtainwall Systems, like our Panel Wall Systems, are totally pre-finished inside and out.
- Delivered to the job site in large preassembled units up to 5' x 35' (1500 mm x 10700 mm) and larger, depending upon project details, handling and shipping constraints.

Central Library – University of Southern Maine, Portland, ME
JSA, Inc., Architects

Greenwood Elementary School, Glen Allen, VA
BCWH Architects; Chris Cunningham Photography

Replacement Window Systems

- Kalwall heavy-duty Window Replacement Systems – like our prefabricated Curtainwall Systems – are factory-assembled into easily managed building units.
- Kalwall provides optimum performance-controlled daylighting and still allows for fulfillment of vision/ventilation requirements.
- Vandal, graffiti, and impact resistance add up to minimal maintenance expenses with Kalwall.
- Eliminates the need for costly blinds, shades or light shelves!

Beach Park Elementary School
Beach Park, IL

8 Daylighting Systems... Endless Possibilities

Standard Skylights

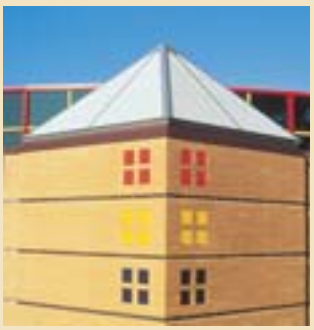

East Columbia Library
Columbia, MD
Grimm & Parker, PC, Architects

- 2¾" (70 mm) and 4" (100 mm) thick flat Skylights up to 5' x 20' (1524 mm x 6096 mm).
- Pyramids from 4' (1220 mm) square up to 20' (6096 mm) square, 3 slopes.
- Geo-Roof® units in standard-sized units from 8' to 24' diameter (2440 mm to 7315 mm), 15° slope.
- Pyramids and Geo-Roofs available knocked down or prefabricated.
- These skylights are standardized for rapid fabrication and delivery.

Savannah High School, Savannah, GA
Hussey Gay Bell & DeYoung Architects

Pre-engineered Skylight Systems

First Bank of Cherry Creek
Denver, CO
Davis Partnership, Architects

- Centerline self-supporting ridges with 20˚, 27˚, 33˚, 45˚, slope to 20' (6096 mm) span.
- Kalcurve™ 180˚, Low-Profile 90˚ in 1' (300 mm) curb width increments: 3' (914 mm) to 24' (7315 mm).
- Lightweight – less than 3 lbs. per square foot (145 Pa/m²) means sub-structure may be minimized. Only thrust-bearing curbs designed to accommodate local live, snow and wind load designs are required.

John F. Nuner Elementary School, South Bend, IN
Hebard & Hebard Architects; hilliardphoto.com, Photography

Custom Skyroof™ Systems

The David Geffen Foundation Building, Beverly Hills, CA
Gwathmey Siegel & Associates Architects; Tom Bonner, Photography

- Sandwich Panel Systems over sub-structure designed and installed by others.
- Flat, curved or combination for design versatility and consistent with all Kalwall Systems.
- Easy, fast installation, coupled with large-sized panels to eliminate troublesome joints.

Roosevelt Elementary School, Elkhart, IN
Fanning Howey Associates, Inc. Architects; Bill Lempke, Photography

Pfizer Global Research & Development, New London, CT

- Combinations of sandwich panels, glass and framing components.
- Standard modular walkways.

NEW!

- Fully pre-engineered canopies and walkways, including aluminum structure, are now available!

Walkways & Canopies

Yahoo Headquarters
Sunnyvale, CA
RMW Architects

Yankee Stadium, Bronx, NY; HOK Sport

- Taking Kalwall sandwich panel technology to another dimension... the marriage of aluminum box beams and Kalwall panels into a monolithic, structural space enclosure.
- Variety of designs, unequaled by any other daylighting system.
- Design control, fabrication, delivery and complete installation for the ultimate in single-source responsibility!
- Installations completed in weeks – not months – due to component standardizations and CAD technology.
- Complete buildings, including Pool Enclosures, featuring non-corrosion and moisture resistance built-in.
- Thermal break technology for the ultimate condensation control.

Structures & Large Systems

Academy of Information Technology and Engineering at Rippowam Campus, Stamford, CT
Fuller and D'Angelo, P.C. Architects and Planners

Kalwall® Since 1955 Structures Unlimited

Kalwall, with strategic partner Structures Unlimited, Inc., offers a single-source solution to self-supporting systems with clearspans over 150 feet. Pre-engineered, custom-fabricated aluminum box beam structures are combined with Kalwall panels to create a total composite Skyroof™ System or even an entire building.

Wall/Panel-Unit Wall System Details

For 2¾" (70 mm) vertically oriented panels.

These are standard Clamp-tite™ details. Systems for other conditions, e.g., horizontally oriented, concealed fastener, Kalcurve™, Explosion Venting or Blast Resisting, are similar, but do contact Kalwall for specifics. High-performance coatings in Kalwall Corrosion Resistant Finish are standard. CAD versions of these details and more available at www.kalwall.com.

KALWALL SPAN TABLE — 4' (1200 mm) MODULE
Maximum Allowable Clearspan

	Translucent Panel	Panel Unit Wall Mid-span Joint	Nominal Grid Size
2" (51 mm) Batten	12'-7" (3835 mm)	9'-2" (2794 mm)	12" x 24" (300 mm x 600 mm)
2¾" (70 mm) ST+ #4SSSE	16'-2" (4927 mm)	13'-1" (3987 mm)	12" x 24" (300 mm x 600 mm)
3¼" (83 mm) IS-H	19'-7" (5970 mm)	17'-11" (5461 mm)	12" x 24" (300 mm x 600 mm)
Silhouette Stiffener	24'-6" (7467 mm)	23'-4" (7112 mm)	12" x 24" (300 mm x 600 mm)

Clearspan at 25 p.s.f. (1.2 kPa) wind pressure, L/60 minimum. Spans based on engineering data and tests. Others possible. CAUTION! Spans will vary with panel internal grid core size and orientation. Above based on grid oriented the panel length.

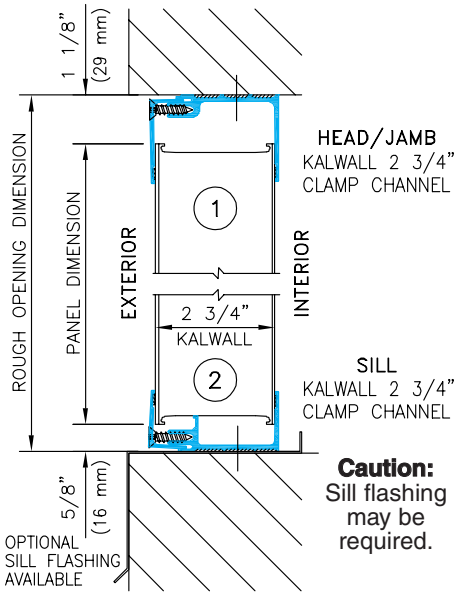

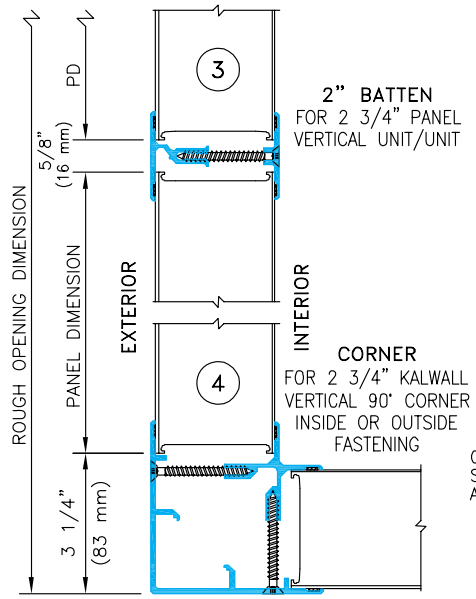

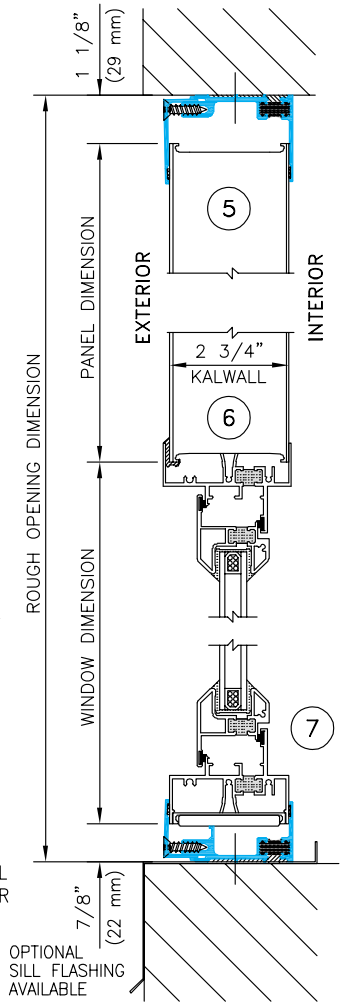

See www.kalwall.com for more complete CAD Details!

Details 5, 7, and 8 show thermally broken options. All Kalwall windows are thermally broken.

Blue items are field-installed and may require trimming.

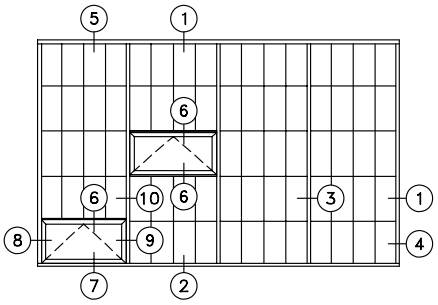

WALL ELEVATION

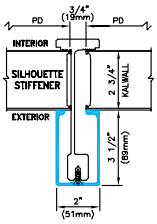

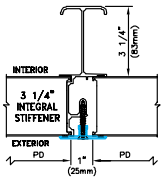

CONTINUOUS PERIMETER BED CAULK BY INSTALLER

KALWALL SEALING TAPES TYPICAL ALL JOINTS

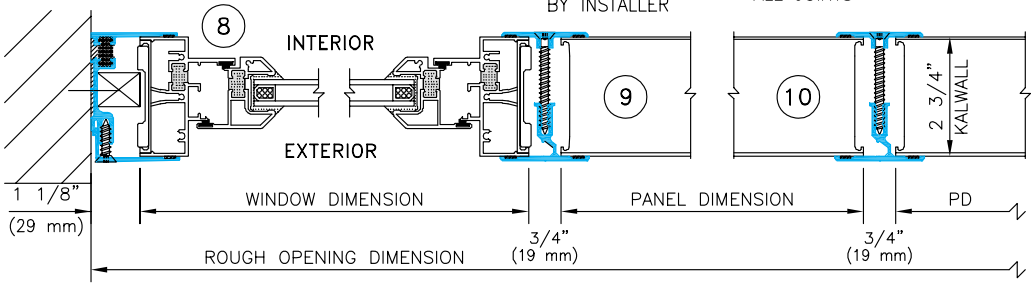

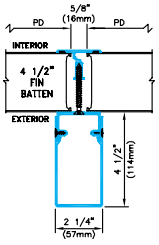

Shed/Supported Ridge Skyroof™ Details

For 2¾" (70 mm) vertically and horizontally oriented flat panels.

Details for other conditions, e.g., Kalcurve™, self-supporting ridge, pyramid, hurricane or blast resistant, are similar, but not identical so be sure to contact Kalwall.

Blue items are field-installed and may require trimming.

Factory-sealed perimeter frames.

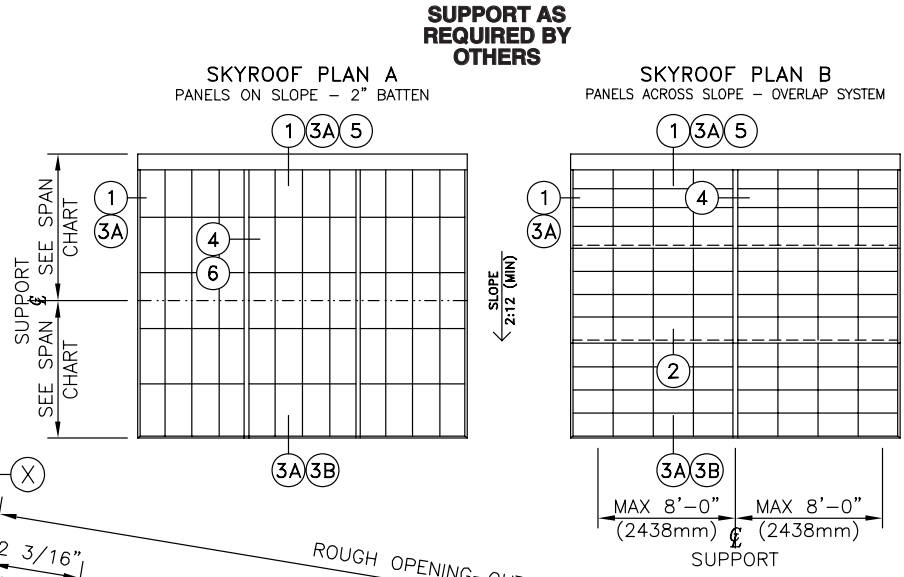

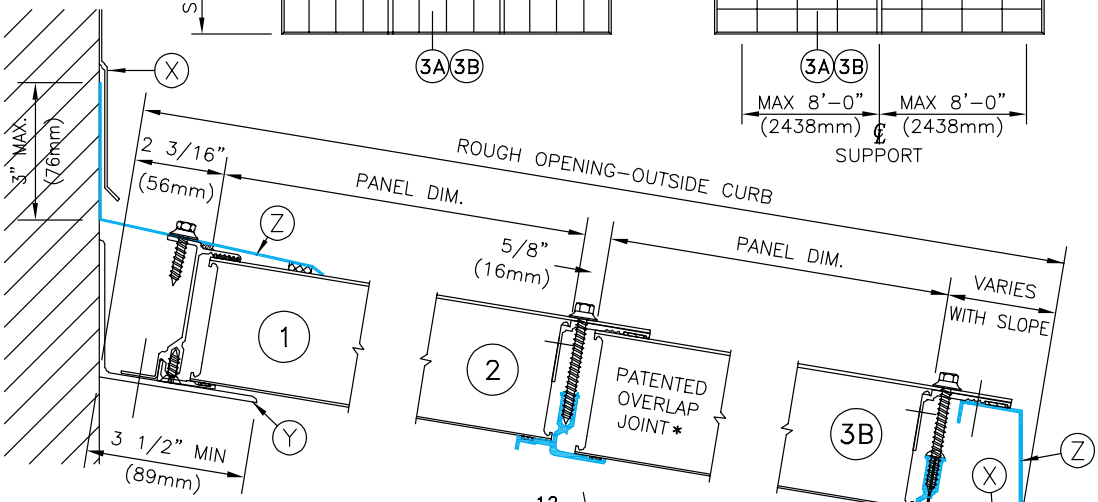

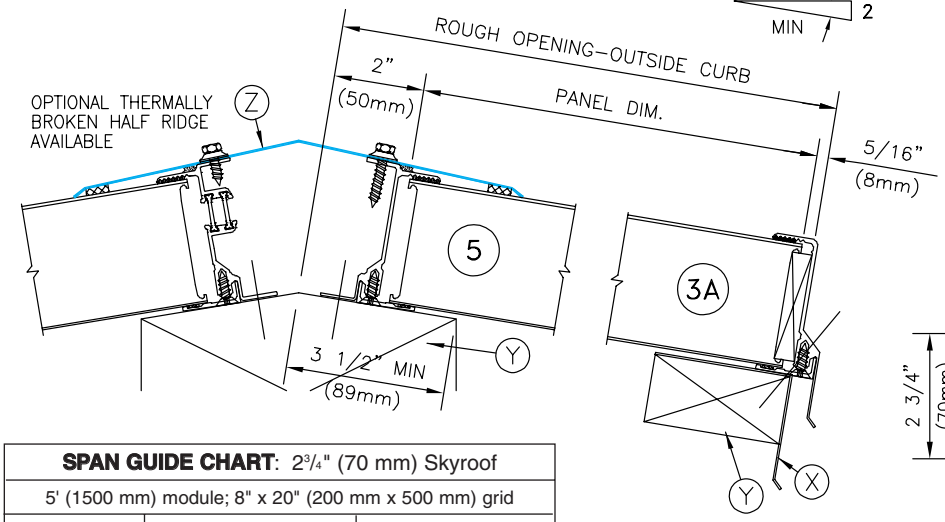

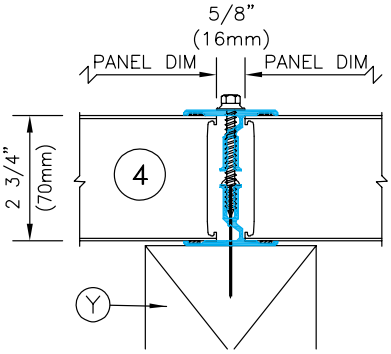

SPAN GUIDE CHART: 2¾" (70 mm) Skyroof		
5' (1500 mm) module; 8" x 20" (200 mm x 500 mm) grid		
Live Load	30 lb./ft.² (1.44 kPa)	40 lb./ft.² (1.92 kPa)
Clearspan	11'-7" (3530 mm)	10'-7" (3225 mm)
5' (1500 mm) module: 12" x 24" (300 mm x 600 mm) grid		
Clearspan	10'-2" (3098 mm)	9'-0" (2743 mm)

Clearspan @ 25 p.s.f. (1.2 kPa) wind pressure, L/60 minimum.
Note: Longer clearspans possible. Contact factory.
RECOMMENDED MINIMUM PITCH Skyroofs (field-installed panels) 2":12" (1:6)

Note: Exposed metal systems available in mill finish or Kalwall Corrosion Resistant Finish per AAMA 2604. Special finishes available as options.

(X) COUNTER FLASHING NOT BY KALWALL
(Y) SUPPORT NOT BY KALWALL
(Z) STANDARD FLASHING BY KALWALL

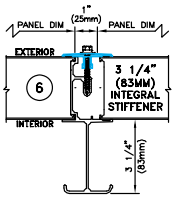

NOTE:
PLEASE CHECK WITH FACTORY FOR ALLOWABLE SPANS IN YOUR LOCALE USING THIS 3¼" I.S.

Designing Panel-Unit Walls

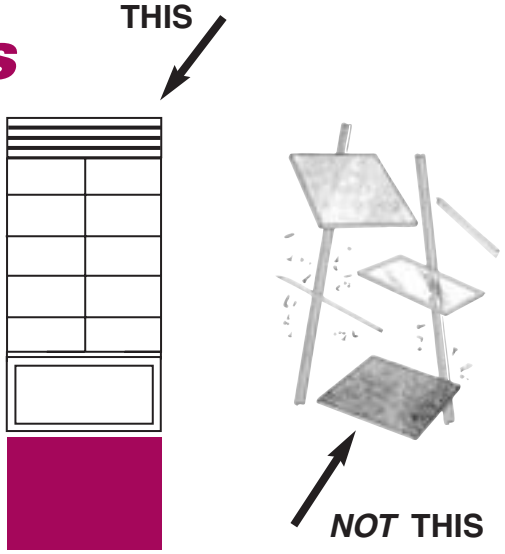

COMPONENTS

Factory-unitized in any combination up to 5' wide x 35' high (1500 mm x 10700 mm). Panel-units ready for installation with no additional finishing. Panel-units eliminate superfluous structure required with most other systems.

LOUVERS – WALL SYSTEMS

Specify Kalwall louver as required.

THERMAL BREAK SASH

Kalwall-manufactured, AAMA C-70 or HC-70 tested projecting sash for top performance up to 5' wide x 4'6'' high (1500 mm x 1400 mm). Fixed and egress units also available. Glazing of all types, including 5/8" (16 mm) and 1" (25 mm) thick glazing panels available; factory-installed, if specified.

OPAQUE PANELS

Sandwich panel construction with fiberglass, aluminum or other faces can be combined in the same system for aesthetic value or to fine-tune energy performance.

PANEL OPTIONS

STANDARD PANEL SIZES

Width — 4' and 5' (1200 mm and 1500 mm), other widths up to 5' (1524 mm) are optional.

Length — 3' to 20' (914 mm to 6096 mm) standard, 16' (4880 mm) maximum for skyroofs.

Thickness — 4" (100mm), 2 3/4" (70 mm). 1 9/16" (40 mm) and 1" (25mm) for window glazing only.

STANDARD GRID DESIGNS

Nominal grid size — 12" x 24" (300 mm x 600 mm) standard; 8" x 20" (200 mm x 500 mm) optional for flat and curved panels.

OPTIONAL GRID DESIGNS

Other designs and grid sizes available. Please note that spans will vary with different grid patterns. Consult factory.

METAL FINISHES

The installation system is available in mill finish or Kalwall Corrosion Resistant Finish, a high-performance coating that meets AAMA 2604, 2605 optional. The finish is highly resistant to acids, alkalis, salt, industrial and moisture-laden atmospheres.

STANDARD GRIDS

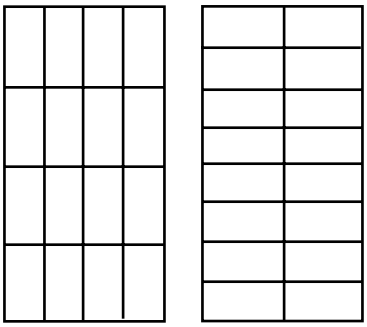

SHOJI REVERSE SHOJI

OPTIONAL GRIDS

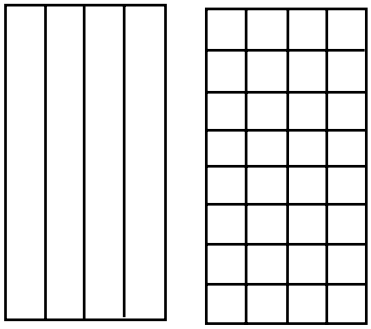

VERTI-KAL TUCKERMAN

KAL-TINTS

TRANSLUCENT COLORS

White and Crystal are standard but other colors are available. The Kal-tint series and pebble finish are options. Colored translucent insulation inserts are available in an endless palette of colors.

INSTALLATION

QUICK, LOW-COST

Kalwall interconnected structural components form rigid, modular units which replace the heavy mullions and floating panels of other curtainwalls. The unique construction and extreme structural strength of the components permit the largest panel-unit wall sections to be installed quickly and efficiently.

Merry Hill Shopping Centre, Brierley Hill
INC Design Associates, Architects

Technical Summary

Kalwall is a composite sandwich; various combinations are possible and test data should be interpreted from this point of view. Consult Sales Service Department for further clarification.

HEAT & LIGHT TRANSMISSION: Listed below are the light transmissions, solar heat gain coefficients, and U-factors for some 2 3/4" (70mm) thick Kalwall panel face sheet combinations. Others are available. Highlighted values indicate thermally broken panels.

FACE SHEET COMBINATIONS		% LIGHT TRANSMISSION 2 3/4" (70 mm) thick panels				note 1	SOLAR HEAT GAIN COEFFICIENT @0°∠				note 3
EXTERIOR COLOR	INTERIOR COLOR	0.53 "U"	0.29 /0.23 "U" note 2	0.22 /0.14 "U" note 2	0.18 /0.10 "U" note 2	0.05 "U" note 2	0.53 "U"	0.29 /0.23 "U" note 2	0.22 /0.14 "U" note 2	0.18 /0.10 "U" note 2	0.05 "U" note 2
Greenish Blue	White	25	14	5	3	12	0.50	0.23	0.14	0.10	0.19
Aqua	White	29	17	6	4	13	0.45	0.24	0.14	0.10	0.21
Rose	White	30	18	6	4	14	0.46	0.24	0.15	0.10	0.21
Ice Blue	White	35	20	8	6	18	0.54	0.28	0.17	0.12	0.26
Greenish Blue	Crystal	37	20	7	4	18	0.53	0.26	0.16	0.11	0.22
White	White	20	15	8	5	12	0.38	0.23	0.15	0.11	0.18
Crystal	White	35	20	12	8	17	0.52	0.28	0.17	0.13	0.25
Crystal	Crystal	50	30	15	10	NA	0.65	0.32	0.18	0.13	NA

Kalwall 100™

NEW Kalwall 4" (100 mm) thick panels
for even greater energy and structural performance!

FACE SHEET COMBINATIONS		% LIGHT TRANSMISSION			SOLAR HEAT GAIN COEFFICIENT		
EXTERIOR COLOR	INTERIOR COLOR	0.55 "U"	0.15 "U"	0.08 "U"	0.55 "U"	0.15 "U"	0.08 "U"
White	White	20	12	5	0.38	0.06	NA
Crystal	White	35	14	7	0.52	0.08	0.04
Crystal	Crystal	50	17	8	0.65	0.10	0.07

U-value SI conversion: 1.0 W/m²K = 0.176 Btu/hr/ft²/°F

1. Approximate values by ASTM E-972. Light transmission values over 30% not recommended for most applications.
2. U-values determined by NFRC test method (ASTM C-236, E-1423 and C-1199 at certified lab). Expressed as Btu/hr/ft²/°F for aluminum grid / thermally broken grid, nominal 12" x 24" (300 mm x 600 mm). Perimeter aluminum excluded. Test temperature at 15 mph wind (6.7 m/s): 0°F (-18°C) cold side & 70°F (21°C) warm side.
3. Shading Coefficient (SC) is equal to 1.15 times the Solar Heat Gain Coefficient (SHGC).

NFRC CERTIFIED SYSTEMS: Kalwall systems provide the best overall U-values as low as .10 (.56 W/m²K)!

BOND STRENGTH: Panels and adhesives are tested according to the stringent requirements of "Criteria for Sandwich Panels" issued by ICC (International Code Council). Before specifying an alternate, insist on actual field proof of bond integrity over a 20-year period. *Caution is urged in accepting look-alikes as equivalents.*

WEIGHT: Most panels and systems weigh under 3 p.s.f. (14.65 kg/m²).

FIRE TESTS: Although some Kalwall panels contain combustible binder resins (ignition temperature greater than 800°F), they will withstand a 1200°F flame for one hour with no flame penetration; pass the Class "A" Burning Brand Test (ASTM E-108), or UL 790 listed Class A Roof system. All interior faces are CC-1 by ASTM D-635. Optional flame-spread/smoke developed ratings by UL 723 tunnel tests, including Class A, are available. Kalwall is listed by: ICC #PFC-1705; British Standard 476, Parts 3, 6, 7. NFPA 268 – Radiant Panel Test-Exterior Walls.

Whenever reference is made to fire tests, the numerical rating is not intended to reflect hazards presented by this or any other material under actual fire conditions.

IMPACT: The shatterproof exterior face will withstand 70 ft.-lbs. (81J) impact. Optional extra-hi-impact faces will withstand 230 ft.-lbs. (311J) impact by UL 972; also small and large missile.

Kalwall+ nanogel

U = 0.05 Panel, 0.10 System

SPECIAL APPROVALS & LISTINGS:

- FM Explosion Venting Walls standard 4440
- FM Wall and Roof Systems standards 4881 and 4471
- Hurricane-Resistant Systems
- NFRC Certified Products Listing
- UL Listings for Class A Roof System and Faces
- UFC 4-010-01 DoD Anti-Terrorism Specifications
- ETA-07/0244 Wall Systems

DoD and GSA
ANTI-TERRORISM COMPLIANT!
UFC 4-010-01
BLAST-RESISTANT CONSTRUCTION

Office Depot, Leicester, UK; NSW Architects

New York Hall of Science, Queens, NY; Polshek Partnership Architects

Davies PE and Dance Building at Roehampton University, London, UK; Devereux & Partners, Architects

Daylighting Analysis

Take the unpredictability out of your site-specific designs.

Visit *www.daylightmodeling.com*

Consider us your Daylighting Design Consultant… We're eager to assist you with the tools of Daylight Modeling to assure your designs achieve the most desireable results. Let us know what you're planning… we can simulate the site-specific impact of daylighting.

kalwall.com • skylightinfo.com • structuresunlimitedinc.com

Since 1955 **Kalwall®**

1111 Candia Road, P.O. Box 237, Manchester, NH 03105
Phone: 603-627-3861 Fax: 603-627-7905
www.kalwall.com

For immediate assistance call: 1-800-258-9777 (N. America)
or e-mail: info@kalwall.com
Inquires for the UK/EU, contact www.stoakes.co.uk

Kalwall Corporation is engaged in continuing research to improve its products. Therefore, the right is reserved to modify or change material in this brochure without notice. This is descriptive literature and does not constitute warranties, expressed or implied. For statement of warranty contact Kalwall Corporation.

©2009 Kalwall Corporation 8/09 25K